ASY Electronics (Jiaxing) Co., Ltd
Business inquiries：+86 181 5734 3325
E-mail：sales@king-sen.com Website：www.asyjx.com
Address：Room 302, Building 11, No. 79 Jinsui Road, Economic and Technological Development Zone, Jiaxing , Zhejiang P.R. China

DC Brushless Controller for Machine Tool Doors

AIG-150S-02

User manual VER1.3

Please read this manual carefully befeore operating the controller

And keep them in a safe place for future reference.

ASY Electronics (Jiaxing) Co., Ltd
Business inquiries：+86 181 5734 3325
E-mail：sales@king-sen.com Website：www.asyjx.com
Address：Room 302, Building 11, No. 79 Jinsui Road, Economic and Technological Development Zone, Jiaxing , Zhejiang P.R. China

Catalogue

SAFETY INSTRUCTIONS ..... 错误！未定义书签。

CHAPTER 1: SAFETY INFORMATION AND PRECAUTIONS 5

SAFETY PRECAUTIONS ..... 错误！未定义书签。

POINTS TO NOTE ..... 错误！未定义书签。

CHAPTER 2: PRODUCT INFORMATION ..... 错误！未定义书签。

2.1 NAMING CONVENTIONS 12

2.2 TECHNICAL SPECIFICATIONS FOR DC BRUSHLESS CONTROLLERS 12

2.3 TECHNICAL SPECIFICATIONS FOR DC BRUSHLESS MOTORS 8

CHAPTER 3: DOOR CONTROLLER PORT SPECIFICATIONS 9

3.1 TERMINAL BLOCK SPECIFICATIONS 9

3.2 CONTROL TERMINAL DESCRIPTION 10

3.3 DEFAULT DEFINITION OF EXTERNAL CONTROL TERMINALS 10

CHAPTER 4: DOOR MACHINE CONTROLLER OPERATION AND FUNCTIONING 17

4.1 OPERATING AND DISPLAY INTERFACE 17

4.2 MENU MODE OPERATING PROCEDURE： 19

CHAPTER 5 PARAMETERS AND EXPLANATIONS 22

CHAPTER SIX: GRAPHICAL REPRESENTATION 30

CHAPTER 7: APPLICATION AND DEBUGGING ..... 错误！未定义书签。

7.1 WIRING INSPECTION 32

7.2 BASIC DEBUGGING PROCESS 34

7.3 ONE-STEP DEBUGGING PROCEDURE FOR SYNCHRONOUS MOTORS ..... **错误！未定义书签。**

CHAPTER 8: FAULTS AND SIMPLE REMEDIES 36

CHAPTER 9: CONTACT US 39

Safety Instructions

1) This user manual details the operating procedures and precautions for the MC series door controller. Users must thoroughly and carefully study this manual before installing or operating the product.
2) This product must be installed or operated by personnel who have received proper training.
3) For safety reasons, it is prohibited to use an extension lead to supply power to more than two electrical appliances via a single socket.
4) When connecting the power cable to the power socket, it must be confirmed that the voltage is below 250V AC and complies with the voltage requirements specified on the rating plate.
5) The earth conductor of the power supply cable must be connected to the system earth of the manufacturing plant using appropriately sized wire and fittings; this connection must be permanently fixed.

6) Repair or high-level maintenance work must only be carried out by appropriately trained electromechanical technicians.

7) All parts used for repairs must be approved by this company before use.

8) This product is guaranteed to be free of charge for repair services within one year of normal operation or up to a maximum of two years from the date of manufacture.

Chapter One Safety Information and Precautions

Definition of safety

In this manual, safety precautions are categorised into the following two types:

Danger	Failure to follow the required procedures may result in hazards that could lead to serious injury or even death.
Notice	Failure to follow the required procedures may result in hazards that could cause moderate or minor injuries, as well as damage to equipment.

Users are advised to carefully read this chapter when installing, commissioning, or servicing this system, and must strictly adhere to the safety precautions outlined herein. The Company shall bear no responsibility for any injury or loss arising from non-compliant operation.

Safety Precautions

1.1.1 Before installation：

Danger	Should the controller be found damaged upon unpacking, do not proceed with installation! Should the items listed on the packing slip not correspond with the actual contents, do not proceed with installation!
Notice	Handle with care during transportation, as mishandling may damage the equipment! Do not touch the components of the controller with your hands, as this may cause damage from static electricity!

1.1.2 During installation：

Danger	Please install on non-combustible materials such as metal; keep away from flammable substances. Failure to do so may cause a fire hazard! Do not tamper with the fixing screws of the equipment components.
Notice	Do not allow wire ends or screws to fall into the unit, as this may cause damage to the controller. Please install the controller in a location with minimal vibration and away from direct sunlight.

1.1.3 When wiring：

Danger	The instructions in this manual must be strictly adhered to, and installation must be carried out by qualified electrical engineers. Failure to do so may result in unforeseen hazards! A circuit breaker must be installed between the controller and the power supply. Failure to do so may cause a fire hazard! Ensure the controller is correctly and properly earthed in accordance with standards, otherwise there is a risk of electric shock! Under no circumstances must the input power supply be connected to the controller's output terminals (U, V, W). Pay attention to the terminal markings and do not connect wires incorrectly! Failure to do so may cause damage to the controller!
Notice	Ensure that the wiring complies with EMC requirements and the safety standards applicable to the region. Refer to the manual for recommended conductor cross-sections. Failure to do so may result in accidents! Encoders must utilise shielded cables, with the shielding reliably grounded at one end! Communication cables must employ shielded twisted pair with a twist pitch of 20–30 mm, and the shielding must be grounded!

1.1.4 Before powering on：

Danger	The controller must be fitted with its cover plate before power is applied. Failure to do so may result in electric shock! All peripheral components must be wired in strict accordance with the wiring instructions provided in this manual. Failure to follow these instructions may cause accidents!
Notice	Please verify that the input power supply voltage rating matches the controller's rated voltage rating; ensure correct wiring positions at the power input terminals (L1, L2) and output terminals (U, V, W); and carefully inspect the peripheral circuitry connected to the controller for any short circuits; check that all connected wiring is securely fastened. Failure to do so may result in controller damage! When controlling synchronous machines, ensure motor parameter tuning is performed prior to initial operation. Failure to do so may result in motor runaway.

1.1.5 After power-up：

Danger	Do not open the cover plate after power-up. Failure to comply may result in electric shock! Do not touch any input or output terminals on the controller. Failure to comply may result in electric shock! Should parameter identification be required, be mindful of the risk of injury from rotating motor components. Failure to comply may cause an accident! Do not arbitrarily alter the controller manufacturer's parameters. Failure to comply may result in damage to the equipment! Do not touch the cooling fan or braking resistor to test temperatures. Failure to comply may cause injury! Non-professional technicians must not inspect signals during operation. Failure to comply may result in personal injury or equipment damage!
Notice	During operation of the controller, prevent any objects from falling into the equipment. Failure to do so may cause damage to the equipment! Do not employ contactor switching methods to control the controller's start/stop functions. Failure to comply may cause damage to the equipment! The controller has undergone safetycompliance testing prior to dispatch. Do not perform withstand voltage or insulation resistance tests, as this may cause damage to the controller!

1.1.6 During maintenance：

Danger

Do not perform maintenance or servicing on equipment while it is energised. Risk of electric shock!
Unauthorised personnel without professional training must not attempt maintenance or servicing on the controller. Risk of personal injury or equipment damage!
After replacing the controller, all parameters must be reconfigured. All plug-in modules must be inserted or removed with the power disconnected!

Points to note

1.2.1 Motor insulation inspection

An insulation test must be conducted on the motor during initial operation, after prolonged periods of disuse, and during routine inspections to prevent controller damage caused by winding insulation failure. When performing the insulation test, ensure the motor leads are disconnected from the controller. A 500V megohmmeter is recommended, and the measured insulation resistance must not be less than 5MΩ.

1.2.2 Where voltage-sensitive components or capacitors for improving power factor are present on the output side.

The controller outputs a PWM waveform. Should components such as capacitors for power factor correction or surge suppressors be installed on the output side, this may cause instantaneous overcurrent in the controller or even damage it. Please refrain from using such components.

1.2.3 Lightning surge protection

This series of controllers possesses a degree of self-protection against induced lightning. In areas prone to frequent lightning strikes, customers should additionally install protective measures upstream of the controller.

1.2.4 Motor adaptation

To ensure optimum system performance, please use the specified motor.

Chapter Two Product information

2.1 Naming conventions

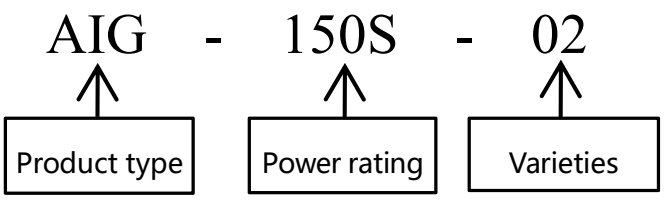

2.2 Technical Specifications for DC Brushless Controllers

	System Model	AIG-150S-02
AC power input	AC inpout Voltage (V)	single phase176～264V 50/60Hz
	power capacity	0.2
	Input current（A）	0.75
DC power output	Output Voltage（V）	DC24
	Output current（A）	5.0
adaptive motor	DC motor（Kw）	0.15 kW
	Speed range	10~200rpm
	Control mode	Full Closed-Loop Space Vector PWM Control

ASY Electronics (Jiaxing) Co., Ltd
Business inquiries：+86 181 5734 3325
E-mail：sales@king-sen.com Website：www.asyjx.com
Address：Room 302, Building 11, No. 79 Jinsui Road, Economic and Technological Development Zone, Jiaxing , Zhejiang P.R. China

Brushless DC Controller Dimensional Drawing Figure：

261x64x41mm(LxWxH)

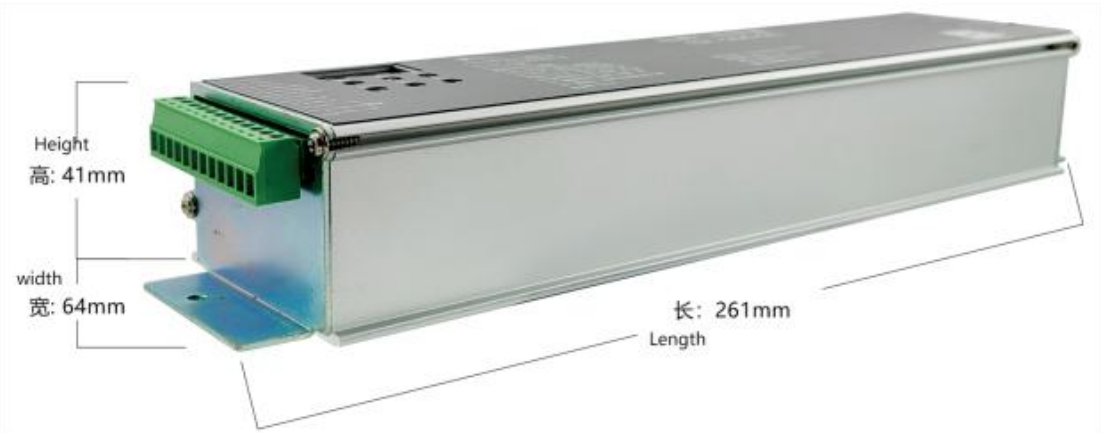

ASY Electronics (Jiaxing) Co., Ltd
Business inquiries：+86 181 5734 3325
E-mail：sales@king-sen.com Website：www.asyjx.com
Address：Room 302, Building 11, No. 79 Jinsui Road, Economic and Technological Development Zone, Jiaxing , Zhejiang P.R. China

2.3 DC Brushless Motor Technical Parameters

Product model	MT02-WS-100W	Product name	DC brushless motor
Rated power	100W	Rated voltage	24V
Rated current	5A	Motor no-load speed	2880r/min
Rated load speed	1850r/min	Gear Ratio	1:15
Rated torque	0.65N.m	Locked-Rotor Torque	0.95N.m
Motor weight	2.8Kg		

DC brushless motor dimension figure：

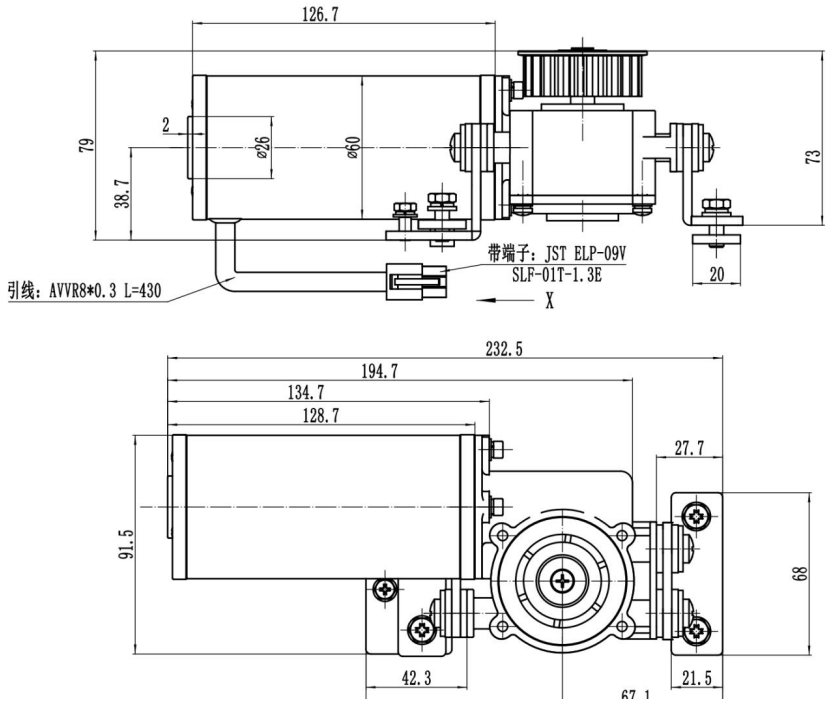

ASY Electronics (Jiaxing) Co., Ltd
Business inquiries：+86 181 5734 3325
E-mail：sales@king-sen.com Website：www.asyjx.com
Address：Room 302, Building 11, No. 79 Jinsui Road, Economic and Technological Development Zone, Jiaxing , Zhejiang P.R. China

Chapter Three Door controller port specification

3.1 Terminal Description

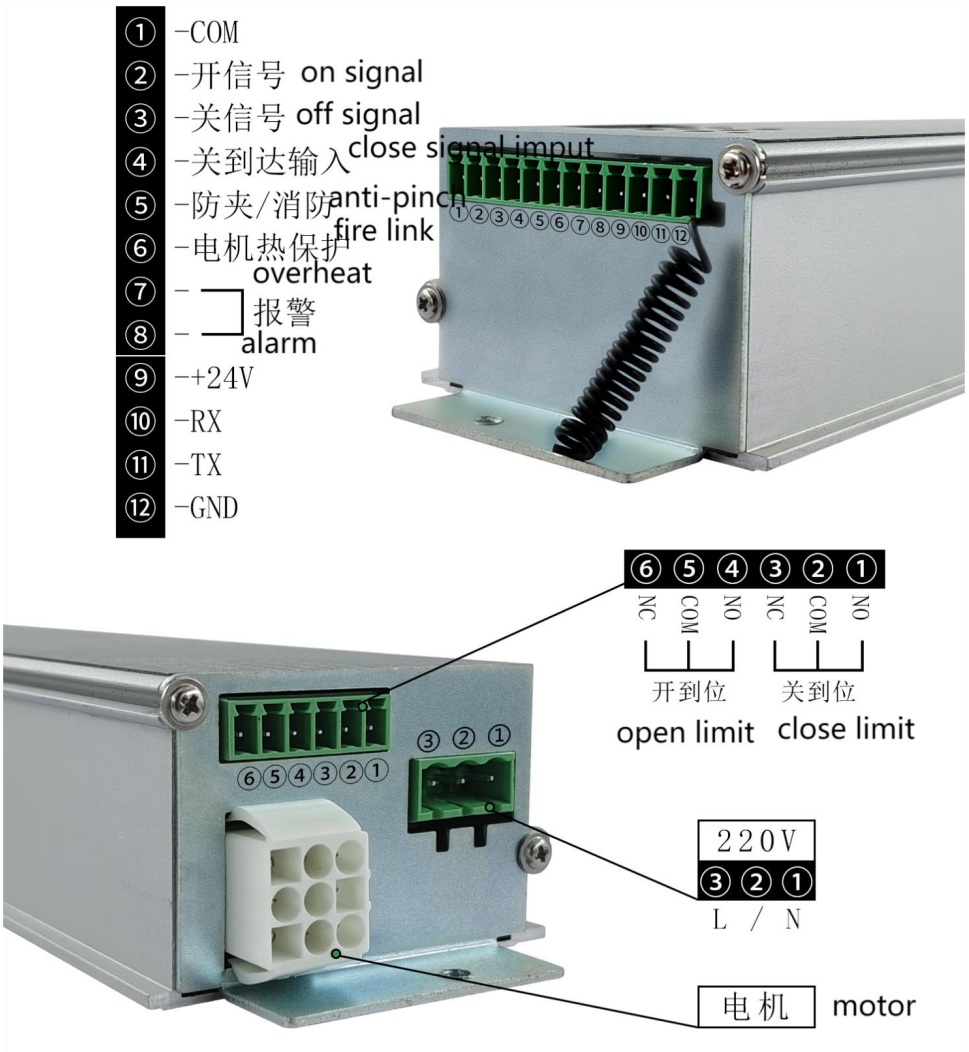

3.2 Control Terminal Description

classification	Terminal number	Terminal Function Description	Related parameter
External control input	01~12	external signal	F1.6
TTL communication	DIP4connector	Parameter setting / debugging	
Relay output	NO1/COM1/NC1 NO2/COM2/NC2 COM3/NO3	Relay output	F1.7、F1.8、F1.9

3.3 External Terminal Default Settings

Terminal name	Definition
01	Input Common (COM)
02	Open Command Input
03	Close Command Input
04	Close Limit Input
05	Safety / Fire Link Input
06	Motor Thermal Input
07	Alarm
08	Alarm
09	+24V
10	RX

Terminal name	Definition
11	TX
12	GND
NO1	Relay 1 Normally Open Output (F1.9 Default: Close Limit)
COM1	Relay 1 Common Terminal (F1.9 Default: Close Limit)
NC1	Relay 1 Normally Closed Output (F1.9 Default: Close Limit)
NO2	Relay 2 Normally Open Output (F1.8 Default: Open Limit)
COM2	Relay 2 Common Terminal (F1.8 Default: Open Limit)
NC2	Relay 2 Normally Closed Output (F1.8 Default: Open Limit)

Chapter Four

Door controller operation and running

4.1Operation and Display Interface

The user can modify the function parameters, monitor the working status and control the operation panel (start and stop) by the operation panel.

图 4-1 操作面板界面

Keypad	Name	Function
MODE	Mode key	Switch between modes / Exit modification mode
SET	Confirm key	Confirm modification / Toggle between current and speed display
RUN	Run key	Run motor
△	Increase key	Increase data or function code
▽	Decrease key	Decrease data or function code
STOP	Stop key	Stop motor

4.2Menu mode operation flow:

4.2.1 One-Key Debugging Function

Press and hold the "STOP" key for 5 seconds to enter One-Key Debugging.The controller will display "A-c", then close the door and show "AE1" (testing initial position).When debugging is complete, "P-U" will appear.Set F0.0=0 to enter Debugging Mode ("T-U" displayed). Use the Up/Down keys to manually open/close the door. The function first performs a closing action. If it does not, set parameter F0.4 to reverse the motor direction and repeat the process.

4.2.2 Running mode

F0.0 = 1 indicates: P-U, the door is controlled by external signals. For software version (n16) 4.24 or later, hold the "△" or "▽" button for over 5 seconds to open or close the door normally.

F1.4> 0: Enter demo mode. Press "RUN" to start the demo, press "STOP" to stop, and press "SET" to toggle speed and current display.

F0.0 = 0 indicates: The T-U operates with slow opening (△▽) and slow closing (▽▽), stopping when 'STOP' is pressed, and switching between speed and current display when 'SET' is pressed.

4.2.3 Parameter Structure

P-U：Main interface
N parameter：Monitoring parameter
F parameter：Technician parameter
O parameter：opening curve
C parameter：closing curve
P parameter：Engineering Parameters

4.2.4 Parameter setting example

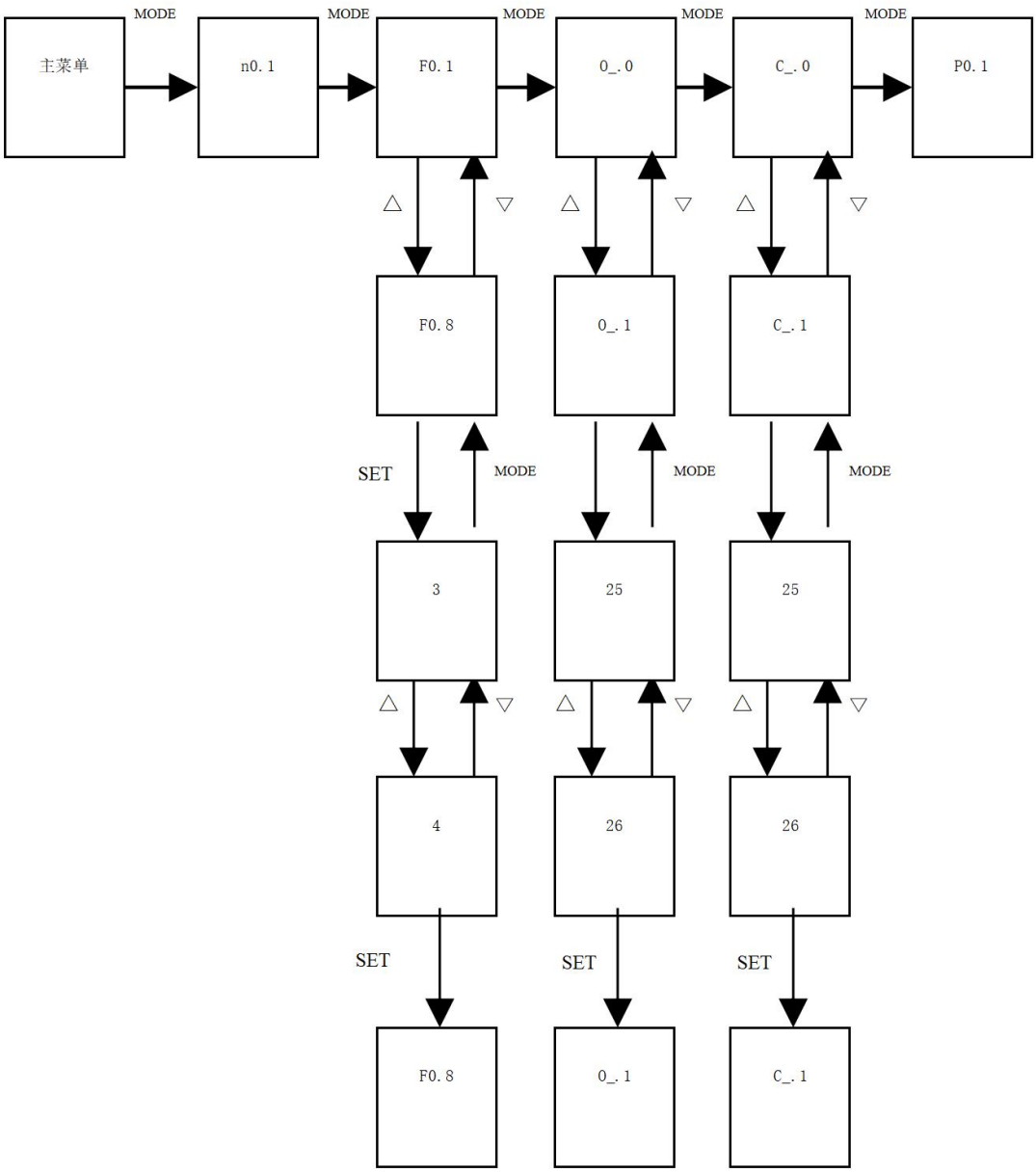

Chapter five Parameters and Description

F0 Parameter group:

No.	Parameter name and unit	Setting range	Initial value	Instruction	Change of validity period
F0.0	Work mode	0~1	1	0=test；1work	Permanent
F0.1	Number of Motor Pole Pairs	2~100	8		off
F0.2	Encoder PPR	24~4096	1024		off
F0.3	Motor Initial Angle	0~359	213		off
F0.4	Motor Mounting Direction	0~1	1		off
F0.5	Pulley Tooth Pitch	2~20	5	unit：mm	off
F0.6	Number of Pulley Teeth	2~50	26		off
F0.7	Door Travel	100~9999	320	Revolutions *100	Arrival Position
F0.8	Opening Speed Level	1~4	3	1=low speed；4=high speed	Arrival Position
F0.9	Closing Speed Level	1~4	2	1=low speed；4=high speed	Arrival Position

F1 Parameter group:

No.	Parameter name and unit	Setting range	Initial value	Instruction	Change of validity period
F1.0	Opening Stall Detection Time	1~50	30	Unit 0.1S	Permanent
F1.1	Closing Stall Detection Time	1~50	10	Unit 0.1S	Permanent

F1.2	Door Start-up Time	1~50	10	Unit 0.1S	Permanent
F1.3	Opening Timeout Protection	0~999	300	0=Continuous Hold；unit:S，Upon the Open Position Hold Time exceeding the preset protection value, the system will enter Low-Current Hold state	Permanent
F1.4	Test Run Door Interval	0~10	0	0=close；unit：S	Permanent
F1.5	Close Limit Signal Installed	0~1	1	0=Disabled；1=Enabled	Permanent
F1.6	Open/Close Signal Mode	0~1	0	0=Level Signal;1=Edge Signal	Permanent
F1.7	Output 3 Function Selection	0~15	6	“0”：Relay activates during the opening process. “1”：Relay activates during the closing process. “2”：Relay activates when the door is fully open “3”：Relay activates when the door is fully closed “4”：Relay activates during anti-pinch “5”：Relay activates upon a controller fault “6”：Relay activates upon controller thermal protection	Permanent
F1.8	Output 2 Function Selection	0~15	2		Permanent
F1.9	Output 1 Function Selection	0~15	3		Permanent

F2 Parameter group:

Param. No.	Parameter Name & Unit	Setting Range	Default	Specification	Validity
F2.0	OP Str Tq	10~500	100	unit：%	Permanent
F2.1	OP Tq Lim	10~500	100	Stall Torque，unit：%	Permanent
F2.2	Pre-OP Hold Tq	10~500	100	Also used for self-learning opening，unit：%	Permanent
F2.3	OP Pos Hold Tq	10~500	100	unit：%	Permanent

F3 Parameter group:

Param. No.	Parameter Name & Unit	Setting Range	Default	Specification	Validity
F3.0	CL Str Tq	10~500	100	unit：%	Permanent
F3.1	Closing torque	10~500	100	Stall Torque，unit：%	Permanent
F3.2	Pre-CL Hold Tq	10~500	100	Also used for self-learning opening，unit：%	Permanent
F3.3	CL Pos Hold Tq	10~500	60	unit：%	Permanent

F4 Parameter group:

Param. No.	Parameter Name & Unit	Setting Range	Default	Specification	Validity
F4.0	Parameter Restore Operation	0~2	1	Power cycle after restoration	Power cycle

F5 Parameter group:

Param. No.	Parameter Name & Unit	Setting Range	Default	Specification	Validity
F5.3	Continuous Stall Prot Cnt	0-99	10	After continuous stall，the door operator enters low-speed, low-current protection，until the stall condition is cleared，0 = Protection disabled	
F5.4	Motor Rated Curr	50~300	110	unit：10mA	Permanent
F5.5	Safety/Fire Link Sel	0~1	1	0 = DI5 as Safety Signal, DI6 disabled 1 = DI5 as Fire Link Signal, DI6 disabled 2 = DI5 as Fire Link, DI6 as Safety Signal	Permanent
F5.6	Safety/Fire Link Sel	0~3	2	0 = Protection resistor N.C., motor runs at low speed during thermal protection	Permanent

				1 = Protection resistor N.O., motor runs at low speed during thermal protection 2 = Protection resistor N.C., motor runs normally during thermal protection 3 = Protection resistor N.O., motor runs normally during thermal protection	
F5.7	Motor Therm Prot Op Curr	50~500	60	单位：%	Permanent
F5.8	Motor Thermal Protection Op Speed	10~200	100	unit：mm/s	Permanent
F5.9	Open/Close Limit Tolerance	5~50	10	unit：mm，Position arrival is confirmed after the tolerance elapses within this range	Permanent

F6 Parameter group:

Param. No.	Parameter Name & Unit	Setting Range	Default	Specification	Validity
F6.0	Clutch Dec Cush Len	2~20	5	unit：mm	Limit Position
F6.1	OP Hold Spd	10~50	25	unit：mm/s	Permanent
F6.2	CL Hold Spd	10~50	25	unit：mm/s	Permanent
F6.3	AP Dead Zone	1~100	10	unit：mm	Permanent
F6.4	OP Confirm Time	1~50	10	unit：0.1s	Permanent
F6.5	CL Confirm Time	1~50	10	unit：0.1s	Permanent
F6.6	Clutch Len	10~100	38	unit：mm	Limit Position
F6.7	OP Clutch Rel Spd	10~200	80	unit：mm/s	Permanent
F6.8	CL Clutch Eng Spd	10~200	60	unit：mm/s	Permanent
F6.9	First Power-On Slow Open/Close Speed (Self-Learning Speed)	20~100	40	unit：mm/s	Permanent

P1 Parameter group:

Param. No.	Parameter Name & Unit	Setting Range	Default	Specification	Validity
P1.0	OP Clutch Rel KP	1~200	4		Permanent
P1.1	OP Str Cush KP	1~200	4		Permanent
P1.2	OP High Spd KP	1~200	2		Permanent
P1.3	OP Dec KP	1~200	20		Permanent
P1.4	OP Cush KP	1~200	4		Permanent
P1.5	OP Hold KP	1~200	4		Permanent

P2 Parameter group:

Param. No.	Parameter Name & Unit	Setting Range	Default	Specification	Validity
P2.0	OP Clutch Rel KI	1~500	100		Permanent
P2.1	OP Str Cush KI	1~500	100		Permanent
P2.2	OP High Spd KI	1~500	50		Permanent
P2.3	OP Dec KI	1~500	5		Permanent
P2.4	OP Cush KI	1~500	100		Permanent
P2.5	OP Hold KI	1~500	100		Permanent

P3 Parameter group:

Param. No.	Parameter Name & Unit	Setting Range	Default	Specification	Validity
P3.0	CL Str Cush KP	1~200	4		Permanent
P3.1	CL High Spd KP	1~200	15		Permanent
P3.2	CL Dec KP	1~200	20		Permanent
P3.3	CL Cush KP	1~200	20		Permanent
P3.4	CL Clutch Eng KP	1~200	2		Permanent
P3.5	CL Hold KP	1~200	2		Permanent

P4 Parameter group:

Param. No.	Parameter Name & Unit	Setting Range	Default	Specification	Validity
P4.0	CL Str Cush KI	1~500	50		Permanent
P4.1	CL High Spd KI	1~500	5		Permanent
P4.2	CL Dec KI	1~500	5		Permanent

P4.3	CL Cush KI	1~500	5		Permanent
P4.4	CL Clutch Eng KI	1~500	50		Permanent
P4.5	CL Hold KI	1~500	50		Permanent

Opening Curve 01~04

Param. No.	Parameter Name & Unit	Setting Range	Default	Validity
O1.0	Op St Cushion Dist Lv1	1~100mm	1	Permanent
O1.1	Op St Cushion Speed Lv1	5~100mm/s	25	Permanent
O1.2	Op Acc Jrk Lv1	100~500mm/s/s/s	300	Permanent
O1.3	Op Acc Lv1	100~1000mm/s/s	300	Permanent
O1.4	Op Speed limit Lv1	100~500mm/s	200	Permanent
O1.5	Op Dec Jrk Lv1	100~500mm/s/s/s	500	Permanent
O1.6	Op Dec Lv1	100~1000mm/s/s	200	Permanent
O1.7	Op Cushion Dist Lv1	1~100mm	5	Permanent
O1.8	Op Cushion Speed Lv1	5~50mm/s	35	Permanent
O1.9	Op Dec Dist Lv1	10~200mm	80	Permanent
O2.0	Op St Cushion Dist Lv2	1~100mm	1	Permanent
O2.1	Op St Cushion Speed Lv2	5~100mm/s	25	Permanent
O2.2	Op Acc Jrk Lv2	100~500mm/s/s/s	300	Permanent
O2.3	Op Acc Lv2	100~1000mm/s/s	300	Permanent
O2.4	Op Speed limit Lv2	100~500mm/s	260	Permanent
O2.5	Op Dec Jrk Lv2	100~500mm/s/s/s	500	Permanent
O2.6	Op Dec Lv2	100~1000mm/s/s	250	Permanent
O2.7	Op Cushion Dist Lv2	1~100mm	5	Permanent
O2.8	Op Cushion Speed Lv2	5~50mm/s	35	Permanent
O2.9	Op Dec Dist Lv2	10~200mm	110	Permanent
O3.0	Op St Cushion Dist Lv3	1~100mm	1	Permanent
O3.1	Op St Cushion Speed Lv3	5~100mm/s	25	Permanent
O3.2	Op Acc Jrk Lv3	100~500mm/s/s/s	300	Permanent
O3.3	Op Acc Lv3	100~1000mm/s/s	300	Permanent
O3.4	Op Speed limit Lv3	100~500mm/s	330	Permanent
O3.5	Op Dec Jrk Lv3	100~500mm/s/s/s	500	Permanent
O3.6	Op Dec Lv3	100~1000mm/s/s	250	Permanent

O3.7	Op Cushion Dist Lv3	1~100mm	5	Permanent
O3.8	Op Cushion Speed Lv3	5~50mm/s	35	Permanent
O3.9	Op Dec Dist Lv3	10~200mm	160	Permanent
O4.0	Op St Cushion Dist Lv4	1~100mm	1	Permanent
O4.1	Op St Cushion Speed Lv4	5~100mm/s	25	Permanent
O4.2	Op Acc Jrk Lv4	100~500mm/s/s/s	300	Permanent
O4.3	Op Acc Lv4	100~1000mm/s/s	300	Permanent
O4.4	Op Speed limit Lv4	100~500mm/s	390	Permanent
O4.5	Op Dec Jrk Lv4	100~500mm/s/s/s	500	Permanent
O4.6	Op Dec Lv4	100~1000mm/s/s	250	Permanent
O4.7	Op Cushion Dist Lv4	1~100mm	5	Permanent
O4.8	Op Cushion Speed Lv4	5~50mm/s	35	Permanent
O4.9	Op Dec Dist Lv4	10~200mm	200	Permanent

Closing Curve C1~C4

Param. No.	Parameter Name & Unit	Setting Range	Default	Validity
C1.0	CL Start Cushion Dist Lv1	1~100mm	5	Permanent
C1.1	CL Start Cushion Speed Lv1	5~100mm/s	40	Permanent
C1.2	CL Acc Jrk Lv1	100~500mm/s/s/s	300	Permanent
C1.3	CL Acc Lv1	100~1000mm/s/s	300	Permanent
C1.4	CL Speed limit Lv1	100~500mm/s	160	Permanent
C1.5	CL Dec Jrk Lv1	100~500mm/s/s/s	500	Permanent
C1.6	CL Dec Lv1	100~1000mm/s/s	150	Permanent
C1.7	CL Cushion Distance Lv1	1~100mm	15	Permanent
C1.8	CL Cushion Speed Lv1	5~50mm/s	25	Permanent
C1.9	CL Dec Distance Lv1	10~200mm	60	Permanent
C2.0	CL Start Cushion Dist Lv2	1~100mm	5	Permanent
C2.1	CL Start Cushion Speed Lv2	5~100mm/s	40	Permanent
C2.2	CL Acc Jrk Lv2	100~500mm/s/s/s	300	Permanent
C2.3	CL Acc Lv2	100~1000mm/s/s	300	Permanent
C2.4	CL Speed limit Lv2	100~500mm/s	210	Permanent
C2.5	CL Dec Jrk Lv2	100~500mm/s/s/s	500	Permanent
C2.6	CL Dec Lv2	100~1000mm/s/s	200	Permanent
C2.7	CL Cushion Distance Lv2	1~100mm	15	Permanent
C2.8	CL Cushion Speed Lv2	5~50mm/s	25	Permanent
C2.9	CL Dec Distance Lv2	10~200mm	80	Permanent
C3.0	CL Start Cushion Dist Lv3	1~100mm	5	Permanent

C3.1	CL Start Cushion Speed Lv3	5~100mm/s	40	Permanent
C3.2	CL Acc Jrk Lv3	100~500mm/s/s/s	300	Permanent
C3.3	CL Acc Lv3	100~1000mm/s/s	300	Permanent
C3.4	CL Speed limit Lv3	100~500mm/s	260	Permanent
C3.5	CL Dec Jrk Lv3	100~500mm/s/s/s	500	Permanent
C3.6	CL Dec Lv3	100~1000mm/s/s	300	Permanent
C3.7	CL Cushion Distance Lv3	1~100mm	15	Permanent
C3.8	CL Cushion Speed Lv3	5~50mm/s	25	Permanent
C3.9	CL Dec Distance Lv3	10~200mm	90	Permanent
C4.0	CL Start Cushion Dist Lv4	1~100mm	5	Permanent
C4.1	CL Start Cushion Speed Lv4	5~100mm/s	40	Permanent
C4.2	CL Acc Jrk Lv4	100~500mm/s/s/s	300	Permanent
C4.3	CL Acc Lv4	100~1000mm/s/s	300	Permanent
C4.4	CL Speed limit Lv4	100~500mm/s	320	Permanent
C4.5	CL Dec Jrk Lv4	100~500mm/s/s/s	500	Permanent
C4.6	CL Dec Lv4	100~1000mm/s/s	150	Permanent
C4.7	CL Cushion Distance Lv4	1~100mm	15	Permanent
C4.8	CL Cushion Speed Lv4	5~50mm/s	25	Permanent
C4.9	CL Dec Distance Lv4	10~200mm	200	Permanent

Monitoring Parameters

No.	Monitoring Items	Display Indication
n01	Output Speed	(unit：mm/s)
n02	Output Current	(unit：A)
n03	Door Status	
n04	Current Encoder Pos	
n05	Open Limit Encoder	
n06	Close Limit Encoder	
n08	Door Position	
n09	Fault 1(latest)	Fault Display
n10	Fault 2(Previous)	
n11	Fault 3(2nd Previous)	
n12	Fault 4(3rd Previous)	
n13	Terminal Status (Inputs)	
n14	Terminal Status (Relay Outputs)	
n15	DC Bus Voltage	(unit：V)

ASY Electronics (Jiaxing) Co., Ltd
Business inquiries：+86 181 5734 3325
E-mail：sales@king-sen.com Website：www.asyjx.com
Address：Room 302, Building 11, No. 79 Jinsui Road, Economic and Technological Development Zone, Jiaxing , Zhejiang P.R. China

No.	Monitoring Items	Display Indication
n16	Software Version	
n21	Run Time	(unit：day)
n22	Close Count 1	Units, Tens,Hundreds
n23	Close Count 2	Thousands,Ten thousands,Hundred Thousands
n24	Close Count 3	Millions,Ten Millions,Ten Millions

Chapter Six Curve Chart

Closing Curve

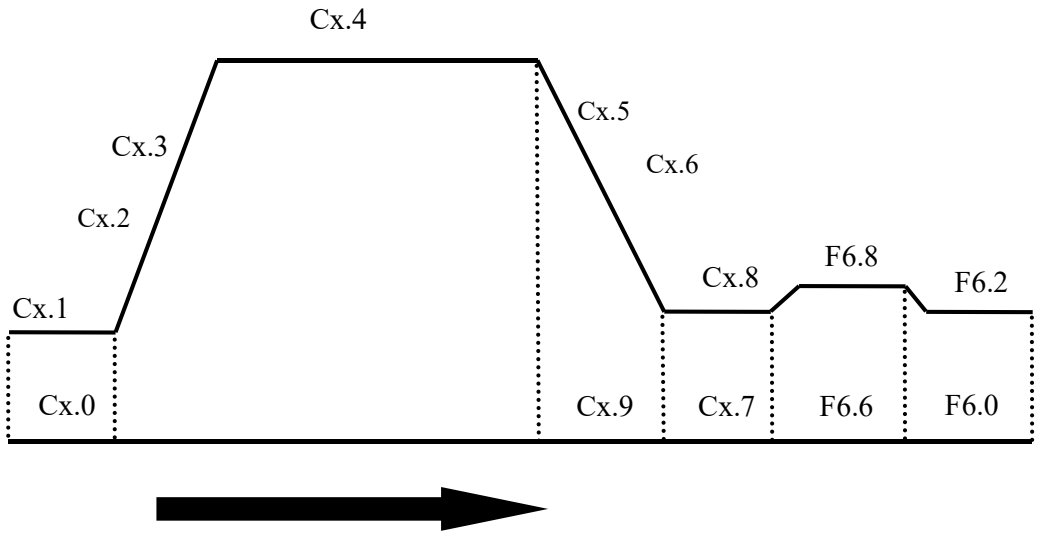

Opening Curve

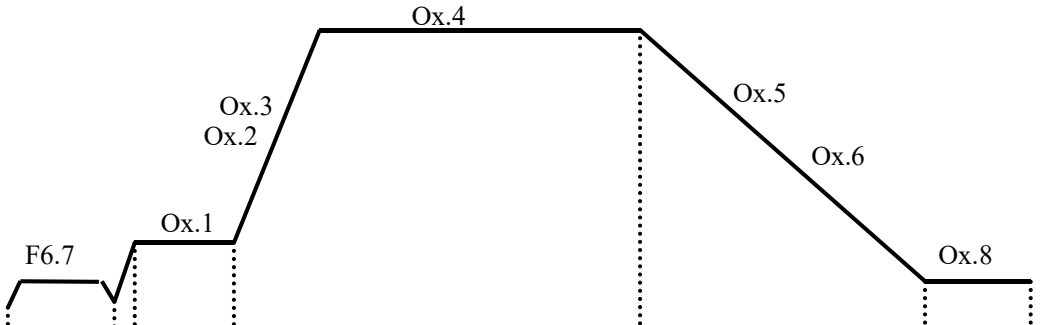

ASY Electronics (Jiaxing) Co., Ltd
Business inquiries：+86 181 5734 3325
E-mail：sales@king-sen.com Website：www.asyjx.com
Address：Room 302, Building 11, No. 79 Jinsui Road, Economic and Technological Development Zone, Jiaxing , Zhejiang P.R. China

Application and Debugging

7.1 Wiring Inspection

7.1.1 Peripheral Circuit Inspection

Before powering up the system, inspect the peripheral wiring to ensure component and personal safety.

1. Wire correctly according to the manufacturer's diagram.
2. Ensure each switch operates normally and reliably.
3. Check the resistance between phases in the main circuit and inspect for short circuits to ground.
4. Ensure the mechanical parts are properly installed to avoid equipment damage or personal injury

7.1.2 Encoder Inspection

The pulse signal feedback from the encoder is crucial for the system to achieve precise control. Pay special attention to the following checks before debugging:

1） Ensure the encoder is firmly installed and the wiring is reliable.

2） It is best to connect the encoder wiring directly from the encoder to the controller. If an extension is needed due to insufficient cable length, the extension must also use shielded cable, and the connection to the original encoder wire should preferably be soldered.

7.1.3 Grounding Inspection

Check that the resistance between the following terminals and the grounding terminal (PE) is infinite. If the resistance is too low, investigate immediately.

a) Between L, N and PE.

b) Between U, V, W and PE.

7.1.4 Confirming Motor Wiring

During the one-key self-learning process, the door operation sequence should be: Close → Open → Close → Stop.

If the motor running direction is opposite to the specified opening/closing direction, set parameter F04 to change the motor rotation direction.

If the motor fails to run, and mechanical overload or stalling has been ruled out, swap any two of the three motor phases, then re-test the initial angle before running again.

Notes:

Parameter F04 will revert to its default value when factory settings are restored. Ensure safety during use.

If the three-phase motor wiring is changed, please re-test the initial angle.

7.2 Basic Debugging Procedure

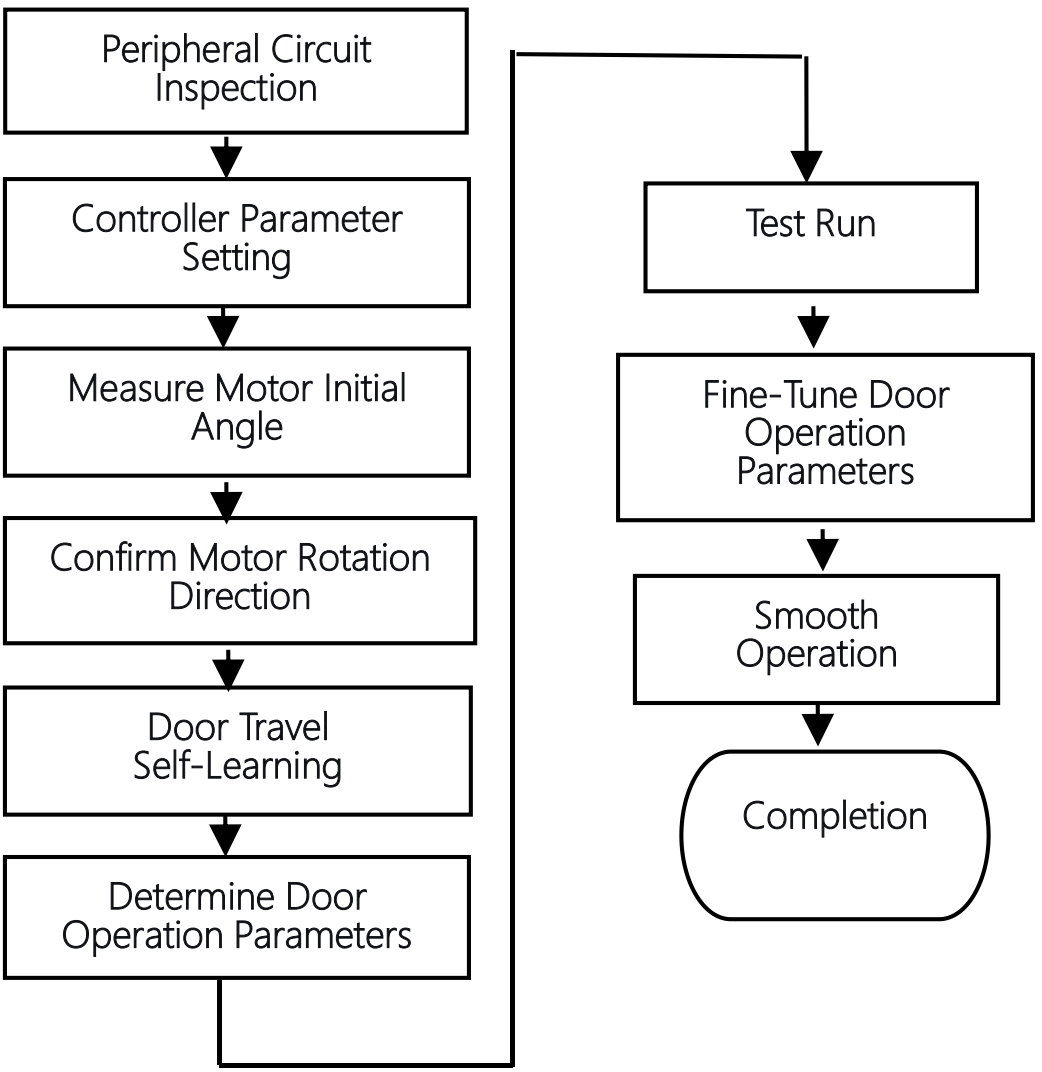

7.3 One-Key Debugging Procedure for Synchronous Motor

After the One-Key Debugging function is activated, the door operator may produce vibration noise when it reaches the limit position. This does not affect performance or test results.

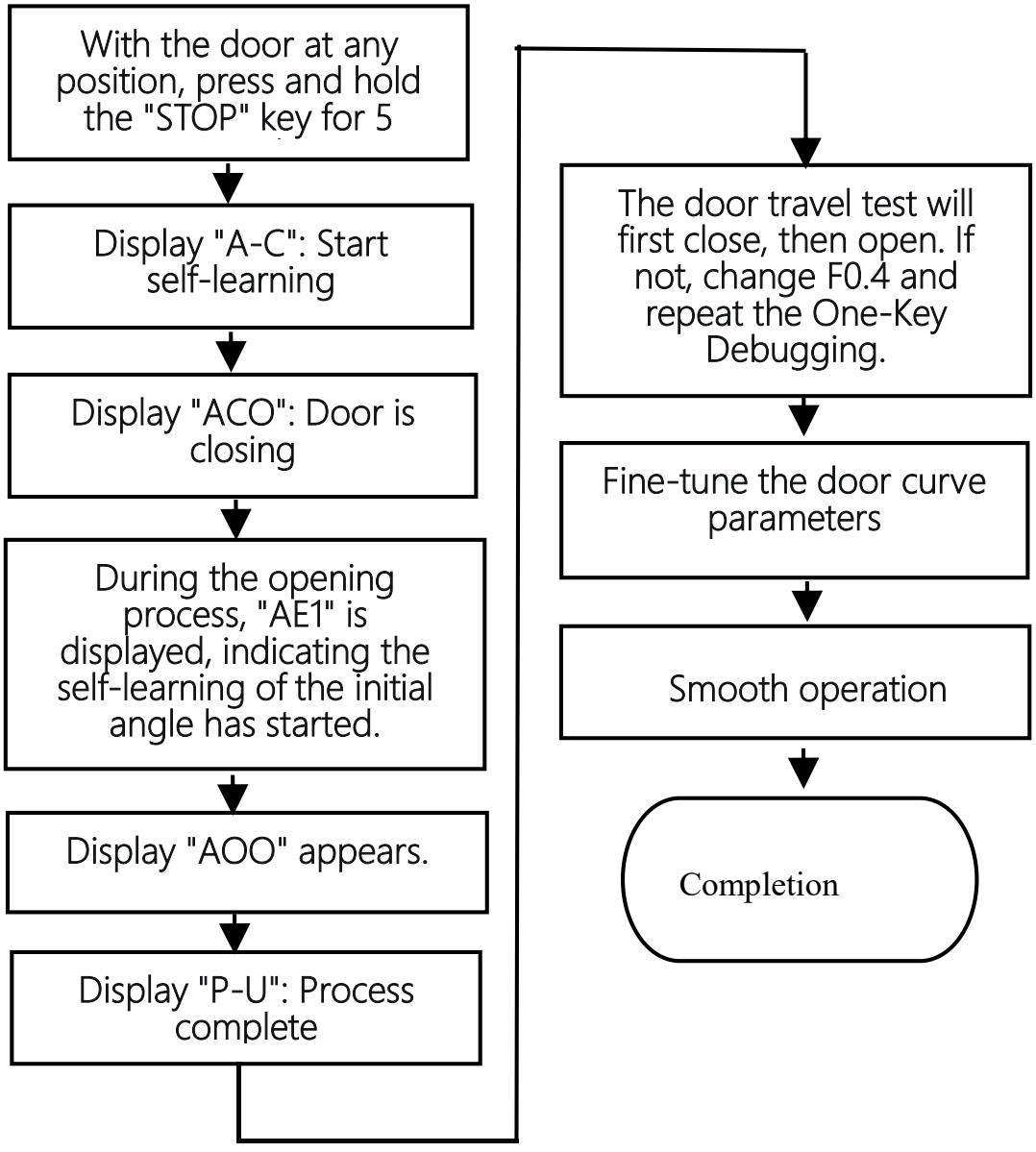

Restore Factory Default Settings:

Press MODE → Display shows FX.X → Press Up Arrow key → Display shows F4.0 → Press SET → Press Up Arrow key → Press SET. The screen will display "TST" and then "---", indicating that the factory reset is successful.

Chapter Eight Faults and Simple Solutions

Fault Code	Description & Troubleshooting
E-01	Hardware Overcurrent: Check wiring; Eliminate excessive load.
E-02	Encoder Fault: Check encoder wiring.
E-03	Undervoltage
E-04	Overvoltage at Standstill
E-05	Overvoltage during Operation
E-06	Current Detection Circuit Fault
E-07	Start-up Failed
E-08	Opening Obstruction
E-09	Closing Obstruction
E-14	EEPROM Fault
E-15	Overspeed Fault
E-16	Reverse Rotation Fault
E-18	Motor Overload

E-19	Motor Stall
E-20	Motor Encoder Angle Deviation Exceeds Limit

Revise resume

Revise resume		
Revision Date	Revised version	Revisions
2022-08-28	Ver 1.0	Synchronous Door Mechanism Curve and Parameter Optimization
2022-09-18	Ver 1.1	Added motor thermal protection; Corrected errata.
2023-12-08	Ver 1.2	Changed thermal protection output; Unified stall sensitivity units.
2024-01-26	Ver 1.3	Added stall protection retry count.

Chapter Nine Contact us

Business Phone： 18157343325 Lila Xu
Technical Phone：18057302496 Wailly Yang
E-mail：sales@king-sen.com
Office website：www.asyjx.com
Address：Room 302, Building 11, No. 79 Jinsui Road, Economic and Technological Development Zone, Jiaxing , Zhejiang P.R. China

*This information product images and technical data is for reference only, if subject to update without prior notice, the specific content of the right to interpret ASY Electronics (Jiaxing) Co., Ltd.